CUSTOMER DESIGN APPROVAL		CUSTOMER COMMENTS
COMPANY NAME		
☐ YES	ACCEPTED BY	
☐ NO	DATE	

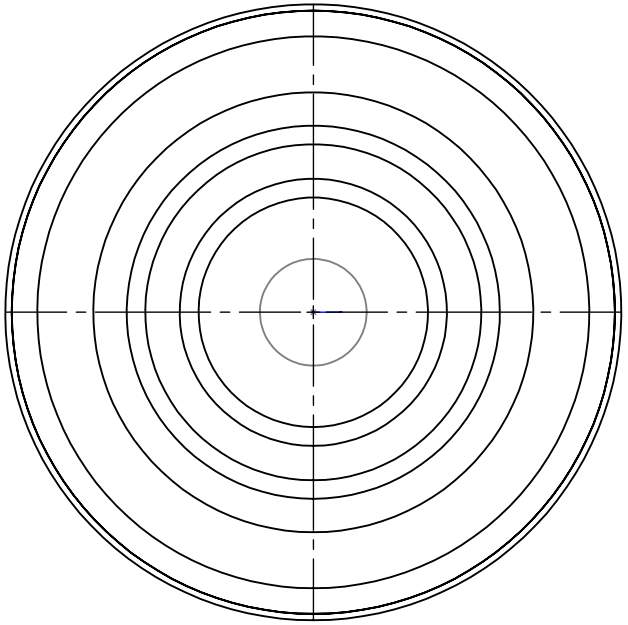

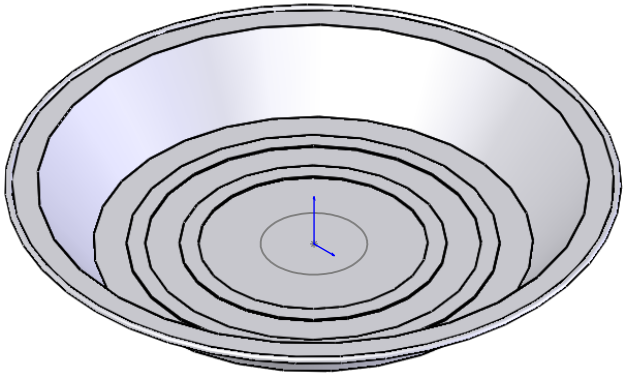

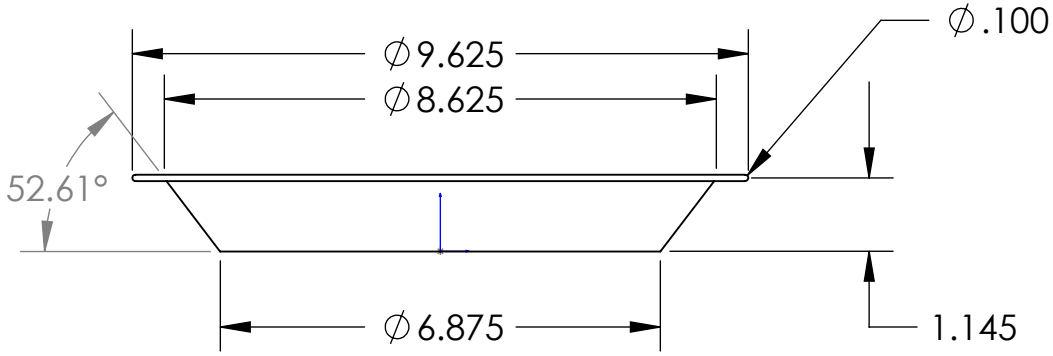

Physical Properties	
Volume Cu In	54.20
Fluid Oz	30.10
Gauge	.0038
Alloy	3003
Temper	H - 19
Embossing	Circle

TITLE:

10-301

PROPRIETARY AND CONFIDENTIAL
THE INFORMATION CONTAINED IN THIS DRAWING IS THE SOLE PROPERTY OF SCHWAN'S GLOBAL SUPPLY CHAIN LLC. ANY REPRODUCTION IN PART OR AS A WHOLE WITHOUT THE WRITTEN PERMISSION OF SCHWAN'S GLOBAL SUPPLY CHAIN LLC. IS PROHIBITED.

UNLESS OTHERWISE SPECIFIED:
DIMENSIONS ARE IN INCHES
TOLERANCES:
FRACTIONAL ± 1/32
ANGULAR: MACH ± 1/2 DEG
TWO PLACE DECIMAL ± .020
THREE PLACE DECIMAL ± .010

DO NOT SCALE DRAWING

	NAME	DATE
DRAWN	JAK	4/22/13
MFG APPR.		
MATERIAL	ALUMINUM	
FINISH		

SIZE	SAP NO.	REV
A	5585	
SCALE 1:3		

5 4 3 2 1